YIFAN

CCS 系列圆锥破碎机

CCS Series Cone Crusher

Leading crushing and screening equipment manufacturer in China　　中国领先的破碎筛分设备制造商

郑州一帆机械设备有限公司(由山德技术(北京)有限公司控股),是中国知名的破碎筛分设备制造商。我们为客户提供全系列破碎筛分设备，包括 液压圆锥破碎机、颚式破碎机、反击式破碎机、立式冲击破碎机(制砂机)、移动式破碎站和振动筛，我们不仅为客户提供高性价比的产品，还提供一流的服务支持及解决方案。

YIFAN

郑州一帆机械设备有限公司
ZHENGZHOU YIFAN MACHINERY CO.,LTD
服务热线：400-665-6688 0371-64627000 64989888　网址：www.yfmac.com　地址：中国郑州荥阳开发区郑源路

CCS系列圆锥破碎机
CCS Series Cone Crusher

CCS831T
CCS837T
CCS848T
CCS855T

CCS831
CCS837
CCS848
CCS855
CCS865
CCS887

CCS系列液压圆锥破碎机是具有世界先进水平的圆锥破碎机，不仅具有高可靠性，而且破碎效率高、运行成本低、产品粒形好等优点，广泛用于矿山和砂石骨料行业，适合破碎坚硬、中等硬度以上的各种矿物和矿石，可以应用于物料的中碎、细碎及制砂。

CCS series cone crusher has the state-of-the-art crushing technology and high reliability, good crushing efficiency, low operation cost as well as excellent shape of final products. It is widely used in the field of mining and aggregate processing industries and is suitable for crushing hard and mid-hard ore and rock. Moreover, it can be used for secondary crushing, tertiary crushing and sand making.

CCS系列中碎液压圆锥破碎机
CCS Series Secondary Cone Crusher

主要部件 Main Components

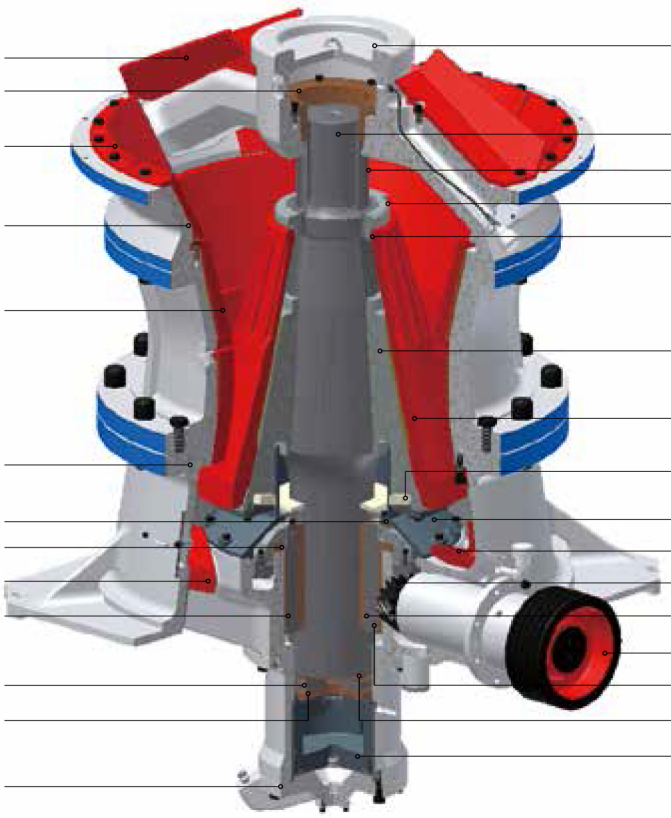

技术参数 Technical Data

型号 Model	CCS831T	CCS837T	CCS848T	CCS855T
电机功率 Motor power(kw)	90	160	250	315
冲程 Stroke(mm)	16–25	18–36	18–40	18–40
维修时最大起重量 Max lift during maintenance(kg)	1850	4750	8500	14200
总重量 Total weight(kg)	7500	12000	22500	36300

注： 上述生产能力是在破碎中硬及以下物料且堆积密度为1.6×10^3kg/m^{3}时开路循环生产中的总吨数。生产能力与破碎物料的物料性能、给料方式、进料粒度及其组成有关。

Note: The capacity is total tons per hour passing through crusher at open circuit when crushing medium and below hardness material and bulk density with 1.6×10^3kg/m^3. Capacities are relative to physical character and type of feeding, feeding size and composition and so on.

CCS系列细碎液压圆锥破碎机
CCS Series Tertiary Cone Crusher

主要部件 Main Components

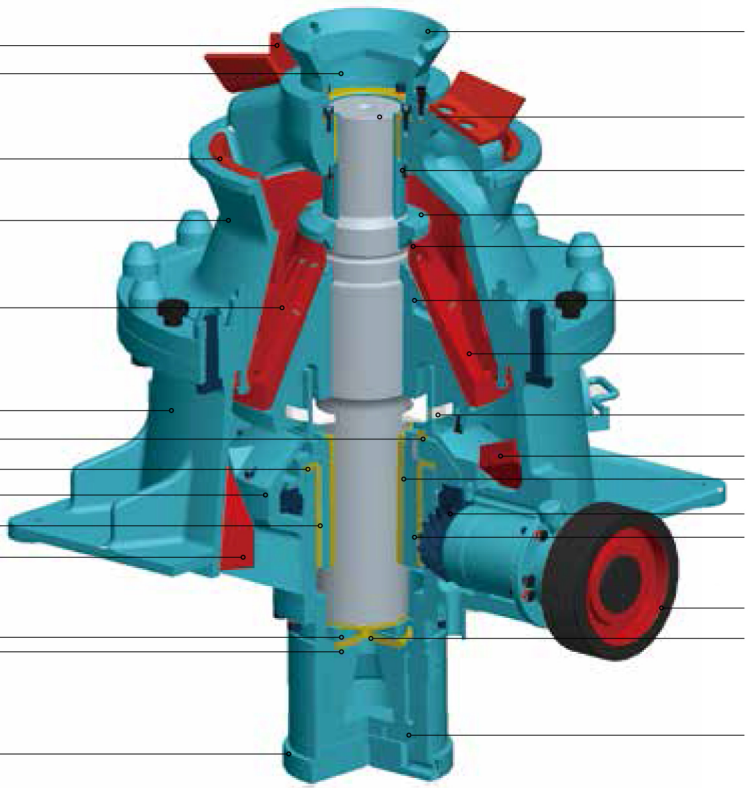

技术参数 Technical Data

型号 Model	CCS831	CCS837	CCS848	CCS855	CCS865	CCS887
电机功率 Moter power(kw)	90	160	250	315	520	600
冲程 Stroke(mm)	16–25	18–40	25–40	25–45	30–50	30–50
维修时最大起重量 Max lift during maintenance(kg)	1650	2850	5150	8600	15600	23000
总重量 Total weight(kg)	5700	9500	17500	28000	53000	75000

注： 上述生产能力是在破碎中硬及以下物料且堆积密度为1.6×10^3kg/m^{3}时开路循环生产中的总吨数。生产能力与破碎物料的物料性能、给料方式、进料粒度及其组成有关。

Note: The capacity is total tons per hour passing through crusher at open circuit when crushing medium and below hardness material and bulk density with 1.6×10^3kg/m^3. Capacities are relative to physical character and type of feeding, feeding size and composition and so on.

CCS系列液压圆锥破碎机生产力 The Capacity of CCS Series Cone Crusher

型号 Model	腔形 Type of Cavity	最大给料尺寸 Max Feeding Size(mm)	紧边排料口及时对应的生产能力 Closed side(mm), Capacity(t/h)													
			22	25	29	32	35	38	41	44	48	51	54	60	64	70
CCS831T	EC	240	85	88–125	95–135	102–165	110–135	125								
	C	200	70–85	75–110	85–120	95										
CCS837T	EC	360		125	135–175	148–230	155–290	165–310	175–326	180–330	195–300	200–255	210			
	C	300	105	115–145	125–195	130–250	140–270	150–285	160–295	165–260	180					
CCS848T	EC	450					252–310	265–358	185–450	300–532	323–586	338–516	355			
	C	400			215–265	225–306	243–320	259–425	272–495	285–456	298–410	310–385				
CCS855T	C	500						290–380	325–410	350–555	655–685	383–753	396–795	432–860	450–785	495–620

型号 Model	腔形 Type of Cavity	最大给料尺寸 Max Feeding Size(mm)	紧边排料口及时对应的生产能力 Closed side(mm), Capacity(t/h)															
			4	6	8	10	13	16	19	22	25	32	38	44	51	57	64	70
CCS831	EC	135				45–65	52–75	58–90	65–100	70–110	75–116	78–120						
	C	90				40–55	43–78	48–88	52–96	55–103	58–108	65–115						
	M	50		32–50	36–58	38–65	42–68	50										
	F	38	25	27–45	29–50	32–55	35–48	40										
CCS837	EC	200					65–117	72–140	75–152	80–162	85–180	95–206	110–215					
	C	145					58–128	66–132	68–136	72–153	80–168	88–182	92–162					
	M	115			63	53–85	55–113	62–136	66–148	70–168	75–173	85–160						
	F	70				66–102	72–115	76–128	81–142	85–126	95							
CCS848	EC	215						116–210	125–285	136–303	148–325	172–350	182–396–	195–368				
	C	175					105–186	112–206	120–296	132–325	143–331	165–359	174–343	186–311				
	M	110					124–195	138–264	146–293	155–310	164–330	175–295	195–255					
	F	70				95–165	108–187	121–203	132–224	141–238	150–252	162–223						
CCS855	EC	275						168–263	186–315	205–396	223–452	248–527	272–589	290–638	310–489			
	C	215						162–285	175–323	195–428	212–486	235–554	253–620	278–530	298–365			
	MC	175						152–275	166–361	108–415	198–463	215–520	235–486	265–350				
	M	135						185–302	198–396	214–453	232–495	265–472	290–395					
	F	85					175–528	195–309	213–366	235–384	256–416	285–423	325					
CCS865	EC	300								430–541	458–781	522–891	577–981	632–1078	696–1188	751–1282	815–1391	870–1225
	C	240							392–552	418–672	445–833	507–950	561–1050	614–1149	676–1266	730–1366	791–1317	845–1200
	MC	195							367–415	392–641	417–789	475–900	525–995	575–1089	634–1199	683–1295	742–1265	792–1137
	M	155							386–529	413–682	439–786	501–896	553–991	606–1085	668–1195	720–1280	782–1173	835–1032
	F	90					350	372–586	400–655	427–699	454–744	516–848	571–797	626–721				
CCS887	EC	370									463–697	528–1020	584–1199	639–1314	704–1447	759–1561	824–1695	880–1809
	C	330									521–733	594–1047	657–1158	720–1268	792–1397	855–1507	928–1635	991–1371
	MC	260								522	556–790	634–1012	701–1198	767–1311	845–1445	912–1558	989–1353	1080
	M	195								550	566–939	646–1070	713–1183	782–1296	861–1427	928–1464	998–1254	
	F	100					387–477	418–663	499–712	479–760	510–809	581–863	642–282					

注： 上述生产能力是在破碎中硬及以下物料且堆积密度为1.6×10^3kg/m^{3}时开路循环生产中的总吨数。生产能力与破碎物料的物料性能、给料方式、进料粒度及其组成有关。

Note: The capacity is total tons per hour passing through crusher at open circuit when crushing medium and below hardness material and bulk density with 1.6×10^3kg/m^3. Capacities are relative to physical character and type of feeding, feeding size and composition and so on.

总公司：山德技术（北京）有限公司
SHANDE TECHNOLOGY (BEIJING) CO., LTD.

郑州一帆机械设备有限公司
地址：中国郑州市荥阳开发区郑源路
邮编：450100
电话：0371-6462 7000 6462 6911
传真：0371-6460 6468
免费咨询电话：400-665-6688
网址：www.yfmac.com
E-mail：yifan@yfmac.com

ZHENGZHOU YIFAN MACHINERY CO., LTD.
Add: Zhengyuan Rd,Xingyang,Zhengzhou Henan 450100,China
Tel:+86 371 64628852
Fax:+86 371 64628872
Website: www.yfcrusher.com
E-mail: sales@yfmac.com

我们的产品在不断更新和改进中，一帆保留在未事先告知的情况下，更改参数及设计的权利。

Our products are constantly updated and improved, YIFAN reserves the right to modify parameters and design without notice.

照片中产品外观颜色与实际机型存在差异，颜色标准以实物为准。

In the photo products' color and appearance might have difference from the actual models, the color need to be subject to the real object.

本手册中的配置不一定是出厂标准配置，请实时请详细咨询我们。

The configuration in this manual are not necessarily the Ex-factory standard, please consult with us before purchasing.